Pneumatic chain hoist model CPA with suspension hook or with integrated trolley

Capacity 2000 - 10000 kg

The conception is in accordance with the design of the model CPE.
With 100 % duty rating and an unlimited number of starts the model CPA is suitable for heavy duty applications. It is insusceptible to contamination, humidity and aggressive mediums from the outside. The hoists are composed of three main components which makes service easy and inexpensive.

Features

- Designed for operating pressures of 4 to 6 bar.
- Robust rotating piston motor has an adjustable spring pressure brake that holds the load secure even in the event of an air failure.
- The standard, oil bath lubricated planetary gearbox is particularly smooth running and enables a low overall height.
- High starting torque due to switching valves in the motor body.
- Low noise emission due to large dimension silencer.
- Sensitive control by means of 2 resp. 4 button pendant control with emergency-stop.
- Up to 3000 kg only one chain fall, leading to a low overall hight.
- The 5-pocket load chain sheave, manufactured from wear resistant case hardening steel, is matched perfectly to the load chain to guarantee smooth and precise chain motion.
- Drop forged suspension and load hooks are made from non-aging, high tensile steel and fitted with robust safety latches.
- The standard case hardened and zinc-plated link chain is matched perfectly to the load chain to guarantee smooth and precise chain motion.
  All requirements of national and international standards and regulations are fulfilled.

Options

- Manual and pneumatic trolleys.
- Rope control
- Stainless steel load chain.

To ensure faultless operation the compressed air supply must be filtered and oiled.

Technical data model CPA

Model	EAN-No. 4025092*	Capacity in kg/ number of chain falls	Lifting speed with rated load* m/min	Lifting speed without load* m/min	Lowering speed with rated load* m/min	Hoist motor kW	Weight** suspension hook kg	Weight** push trolley kg	Weight** geared trolley kg	Weight** pneumatic trolley kg
CPA 20-8	*073868	2000/1	7.4	9.9	11.0	2.6	121	184	188	199
CPA 30-6	*073875	3000/1	6.0	9.9	13.0	3.2	121	184	188	199
CPA 40-4	*073882	4000/2	3.7	5.0	5.5	2.6	140	202	206	218
CPA 50-3	*073899	5000/2	3.4	5.0	6.0	3.0	140	202	206	218
CPA 60-3	*073905	6000/2	3.0	5.0	6.5	3.2	140	202	206	218
CPA 75-2	*056915	7500/3	2.0	3.3	4.3	3.2	–	–	–	–
CPA 100-2	*075701	10000/4	3.4	5.0	6.0	2x3.0	–	–	–	–

*Values for 6 bar (flow pressure), air consumption with rated load 4.7 m^3/min. CPA 100-2: 9.4 m^3/min.
**Weight at standard lift (3 m). Other lifting heights on request.

Application with pneumatic trolley

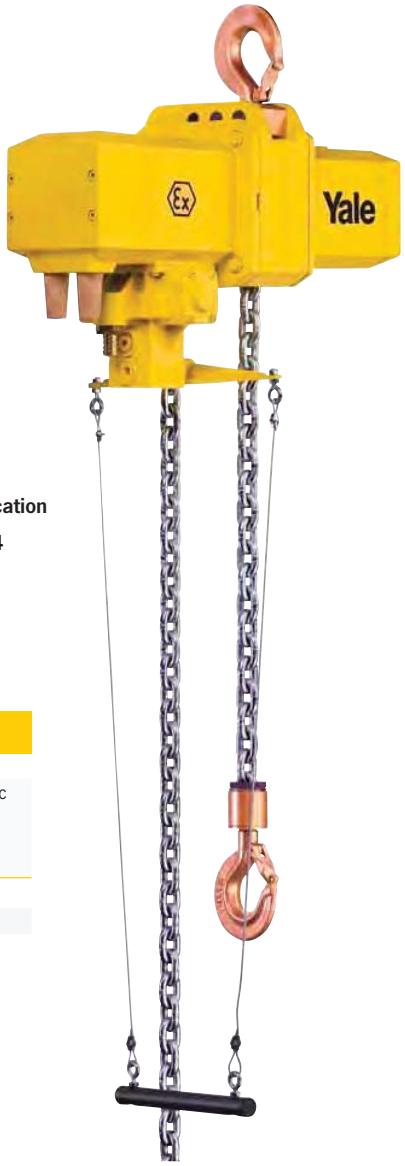

Protection classification
II 2 GD c IIB T4

Technical data trolleys

Capacity kg	Size	Beam flange width b mm	Beam flange thickness t max. mm	Curve radius min. m	Pneumatic trolley travel speed m/min	Pneumatic trolley motor kW
2000 - 6000	A	98 - 180	27	2.0	18	0.55
2000 - 6000	B	180 - 300	27	1.8	18	0.55
7500 - 10000	B	125 - 310	40	1.8	–	–

Other capacities on request.

Dimensions model CPA

Model	CPA 20-8	CPA 30-6	CPA 40-4	CPA 50-3	CPA 60-3	CPA 75-2	CPA 100-2
A, mm	516	516	681	681	681	950	1068
A1, mm	286	286	428	428	428	479	651
B, mm	35	35	45	45	47	60	60
C, mm	37	37	46	46	42	52	52
D, mm	24	24	30	30	30	40/45	40/45
F1, mm	160	160	160	160	160	160	160
F2, mm	165	165	165	165	165	165	165
G, mm	220	220	220	220	220	220	581
G1, mm	180	180	140	140	140	268	311
G2 (13 m), mm	258	258	218	218	218	–	–
G2 (21 m), mm	278	278	238	238	238	345	408
H1, mm	110	110	110	110	110	110	110
H2, mm	135	135	135	135	135	307	256
H3, mm	115	115	115	115	115	115	115
K1, mm	100	100	100	100	100	92	92
K2, mm	51	51	51	51	51	62	62
M, mm	50	50	9.6	9.6	9.6	139	181
N, mm	60	60	100	100	100	136	291
Q1, mm	272	272	272	272	272	272	272
Q2, mm	325	325	325	325	325	325	325

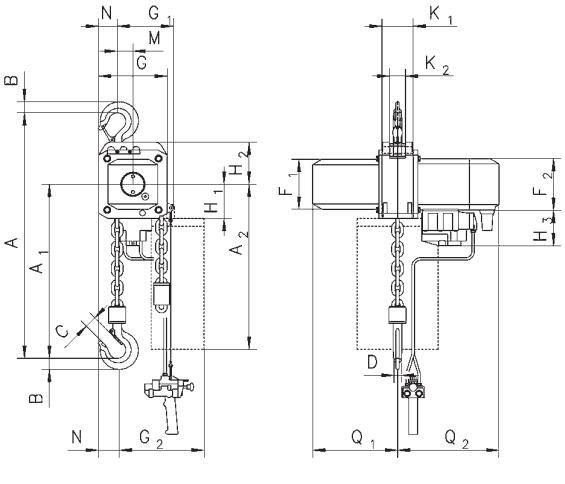

Model CPA with suspension hook, 2000 - 3000 kg, single fall

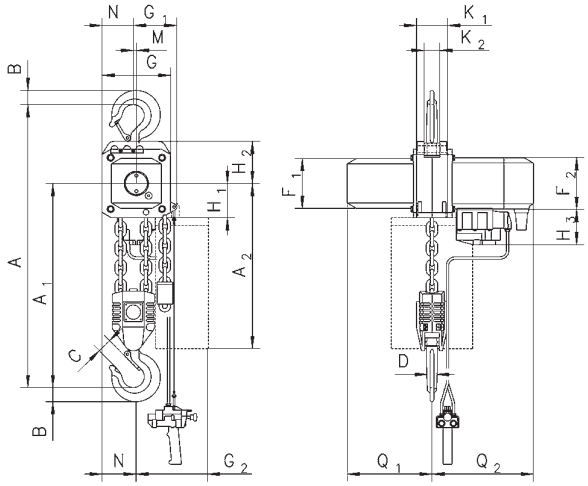

Model CPA with suspension hook, 4000 - 6000 kg, double fall

Dimensions model CPA

Model	CPA 20-8	CPA 30-6	CPA 40-4	CPA 50-3	CPA 60-3	CPA 75-2	CPA 100-2
A2 (13 m), mm	430	430	430	430	430	–	–
A2 (21 m), mm	530	530	530	530	530	530	530
A4, mm	465	465	615	615	615	855	965
A5, mm	298	298	298	298	298	477	425
A6, mm	190	190	190	190	190	182	182
b, mm	A = 98 - 180/ B = 180 - 300	A = 98 - 180/ B = 180 - 300	A = 98 - 180/ B = 180 - 300	A = 98 - 180/ B = 180 - 300	A = 98 - 180/ B = 180 - 300	125 - 310	125 - 310
F, mm	150	150	150	150	150	113	113
I, mm	142.5	142.5	142.5	142.5	142.5	130	130
L1, mm	209	209	209	209	209	200	200
L2, mm	262.5	262.5	262.5	262.5	262.5	215	215
L3, mm	265	265	265	265	265	265	265
L4, mm	213	213	253	253	253	291	291
L5, mm	312	312	272	272	272	–	–
L6, mm	315	315	275	275	275	–	–
O, mm	125	125	125	125	125	150	150
P, mm	208	208	208	208	208	208	208
P1, mm	284	284	284	284	284	284	284
S, mm	b + 70	b + 70	b + 70	b + 70	b + 70	b + 98	b + 98
t, mm	27	27	27	27	27	40	40
T1 size A	182	182	182	182	182	–	–
T1 size B	242	242	242	242	242	270	270

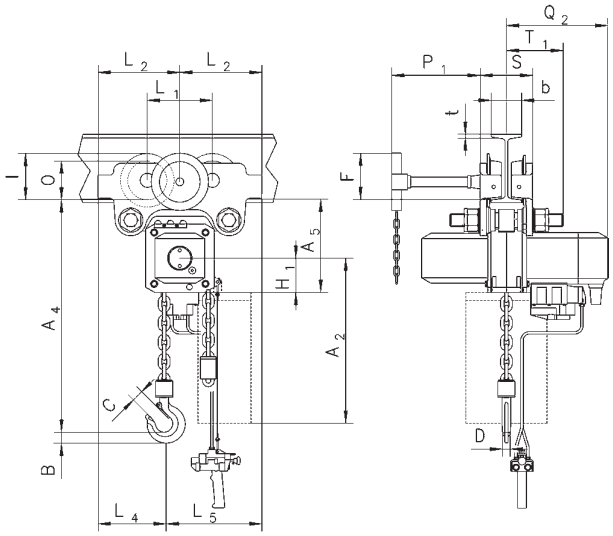

Model CPA with integrated manual push or geared trolley

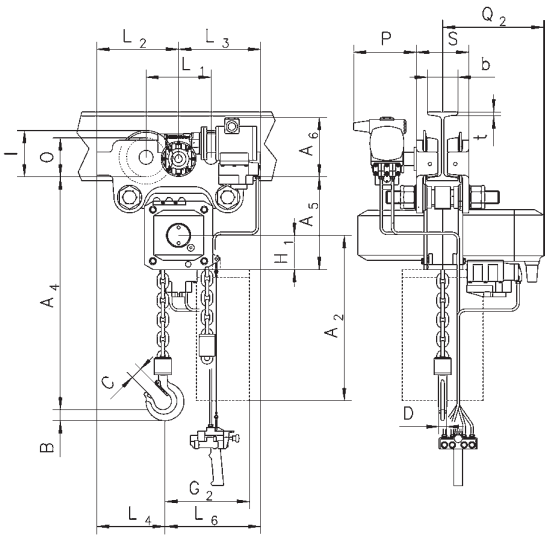

Model CPA with integrated pneumatic trolley